DESIGN DRAWINGS

LEGEND AND SYMBOLS

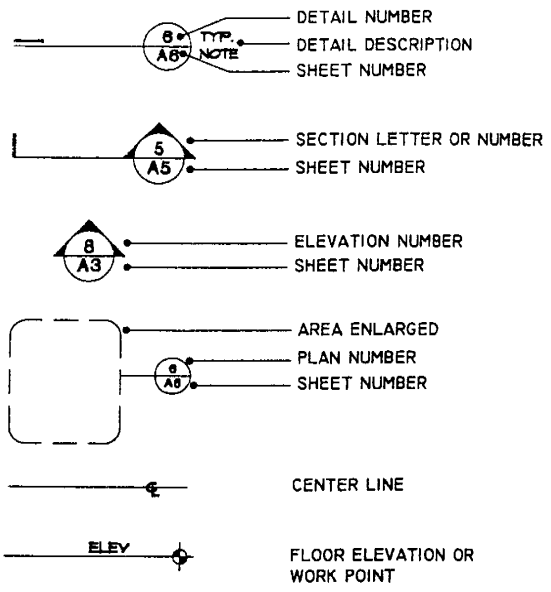

LOCATION MAP

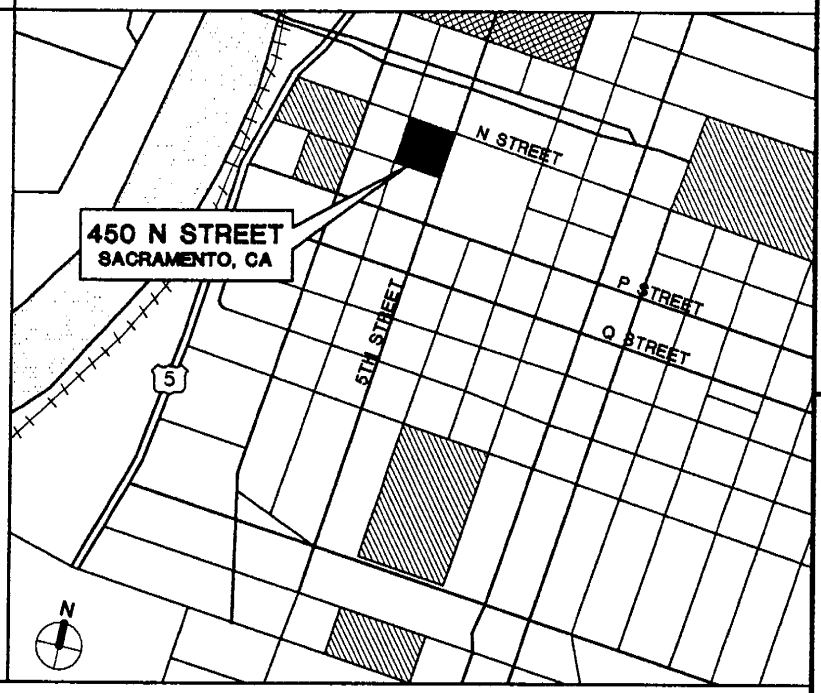

DRAWING INDEX

SK-1	TITLE SHEET
SK-2	TYPICAL BUILDING FLOOR PLAN
SK-3	WALL SECTION
SK-4	NORTH ELEVATION
SK-4A	PARTIAL NORTH ELEVATION - CRACK REPAIR
SK-5	EAST ELEVATION
SK-6	SOUTH ELEVATION
SK-7	WEST ELEVATION
SK-8	PARTIAL ELEVATION & MOCK-UP AREA
SK-9E	TYPICAL HORIZONTAL RAIL - EXISTING
SK-9R	TYPICAL HORIZONTAL RAIL - REMEDIATION
SK-10E	SPANDREL PANEL RAIL - EXISTING
SK-10R	SPANDREL PANEL RAIL - REMEDIATION
SK-11E	SILL TO PRECAST PANEL - EXISTING
SK-11R	SILL TO PRECAST PANEL - REMEDIATION
SK-12E	HEAD TO PRECAST PANEL - EXISTING
SK-12R	HEAD TO PRECAST PANEL - REMEDIATION
SK-13E	TYPICAL VERTICAL - EXISTING
SK-13R	TYPICAL VERTICAL - REMEDIATION
SK-14E	VERTICAL AT SPANDREL - EXISTING
SK-14R	VERTICAL AT SPANDREL - REMEDIATION
SK-15E	TYPICAL RAIL TO MULLION - EXISTING
SK-15R	TYPICAL RAIL TO MULLION - REMEDIATION
SK-16E	TYPICAL VERTICAL SPLICE JOINT - EXISTING
SK-16R	TYPICAL VERTICAL SPLICE JOINT - REMEDIATION

McGinnis Chen Associates Inc.
ARCHITECT _ ENGINEERS

450 N STREET
SACRAMENTO, CA
EXTERIOR ENVELOPE REMEDIATION

TITLESHEET

01/24/05

04128

SK-1

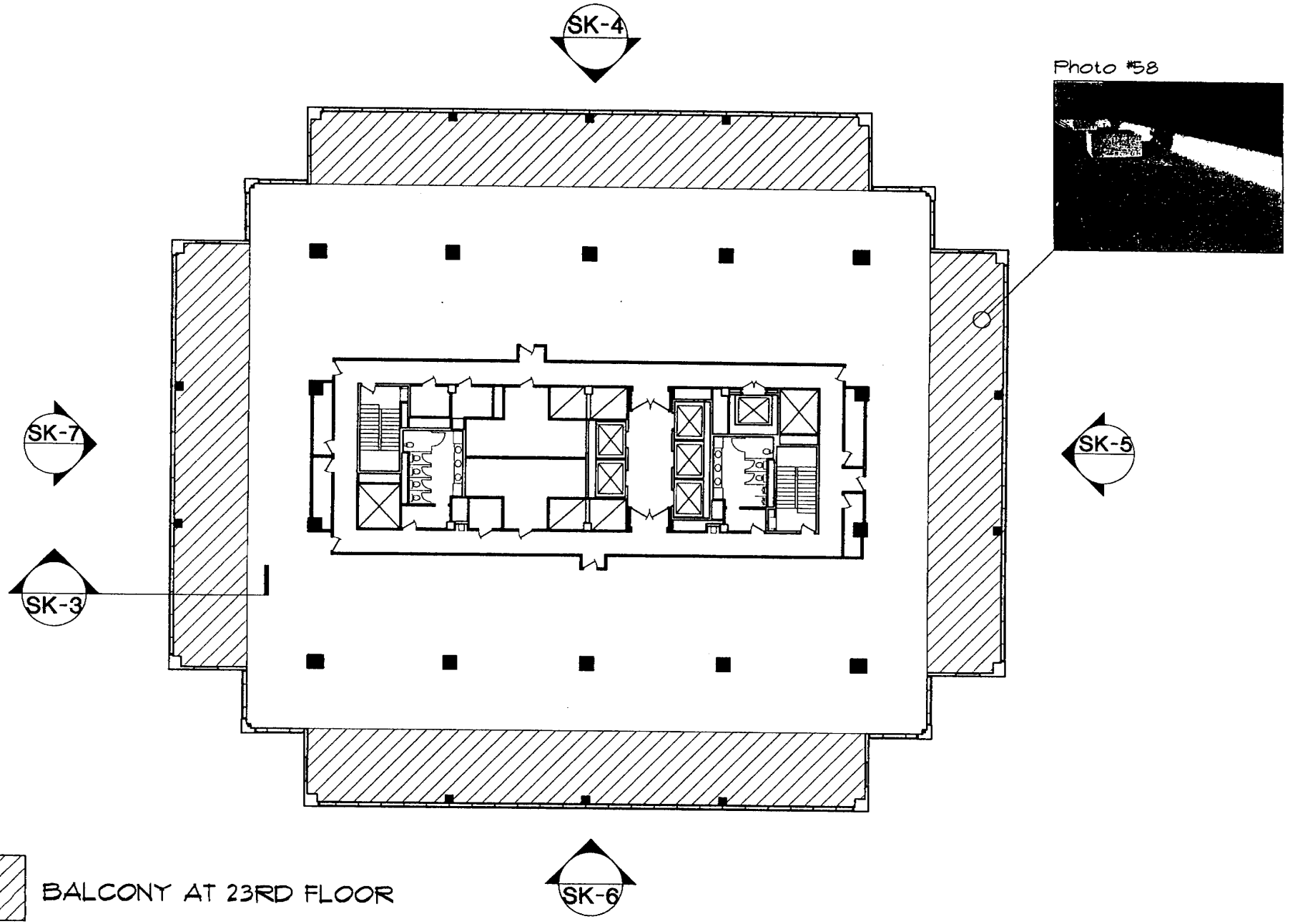

SK-2

04128

01/24/05

TYPICAL BUILDING FLOOR PLAN
SCALE: 1" = 30"

450 N STREET

SACRAMENTO, CA

EXTERIOR ENVELOPE REMEDIATION

McGinnis Chen Associates Inc.
ARCHITECTS ENGINEERS

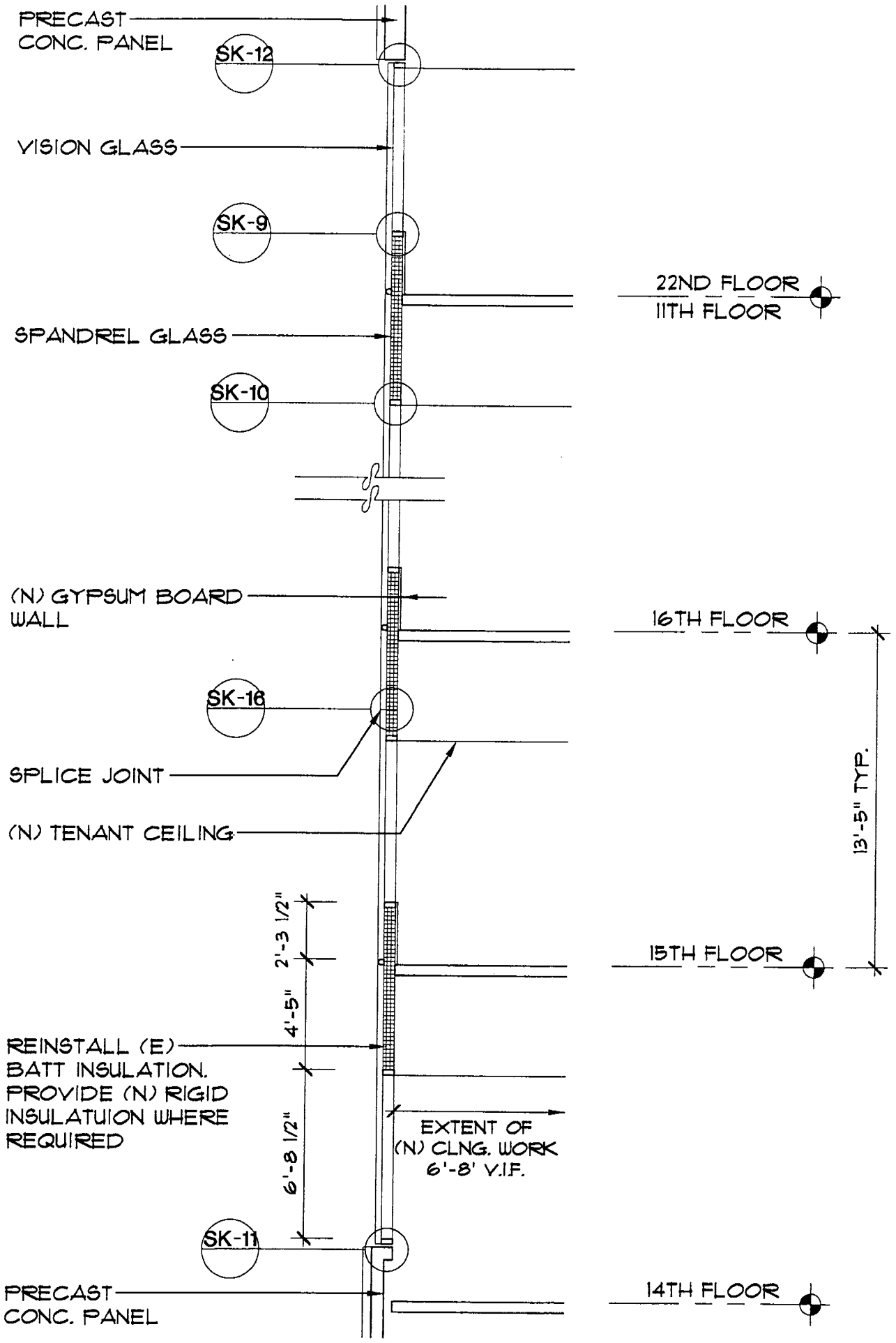

McGinnis Chen Associates Inc.
ARCHITECT, ENGINEERS

450 N STREET
SACRAMENTO, CA
EXTERIOR ENVELOPE REMEDIATION

WALL SECTION

01/24/05

04128

SK-3

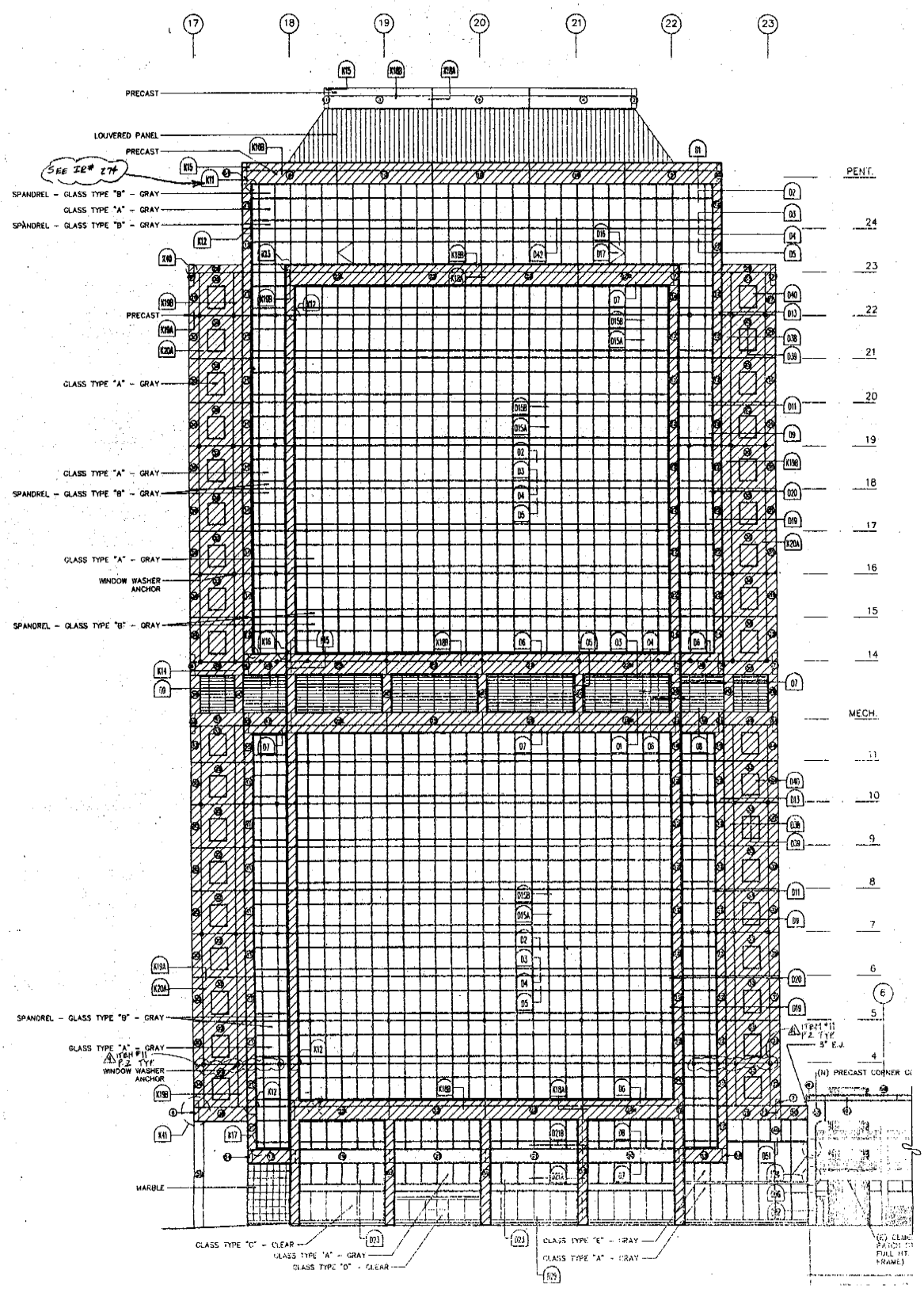

LEGEND:

SCOPE OF WORK: PRECAST CONCRETE

SK-4	04128	01/24/05	NORTH ELEVATION SCALE: 1/32"=1'-0"	450 N STREET SACRAMENTO, CA EXTERIOR ENVELOPE REMEDIATION

McGinnis Chen Associates Inc.
ARCHITECT - ENGINEERS

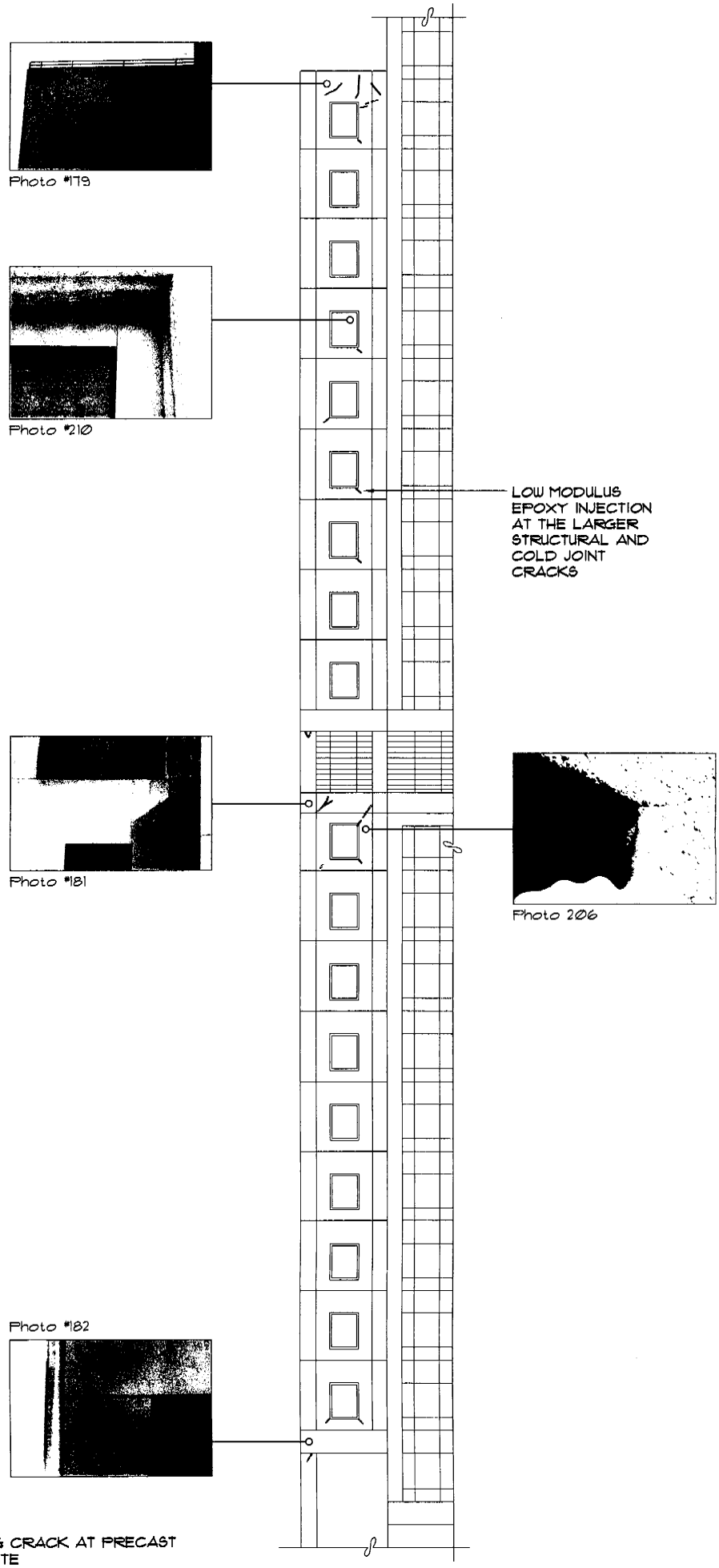

SK-4	04128	01/24/	PARTIAL NORTH ELEVATION - CRACK REPAIR REPRESENTATIVE OF OTHER ELEVATIONS	450 N STREET SACRAMENTO, CA	McGinnis Chen Associates Inc.

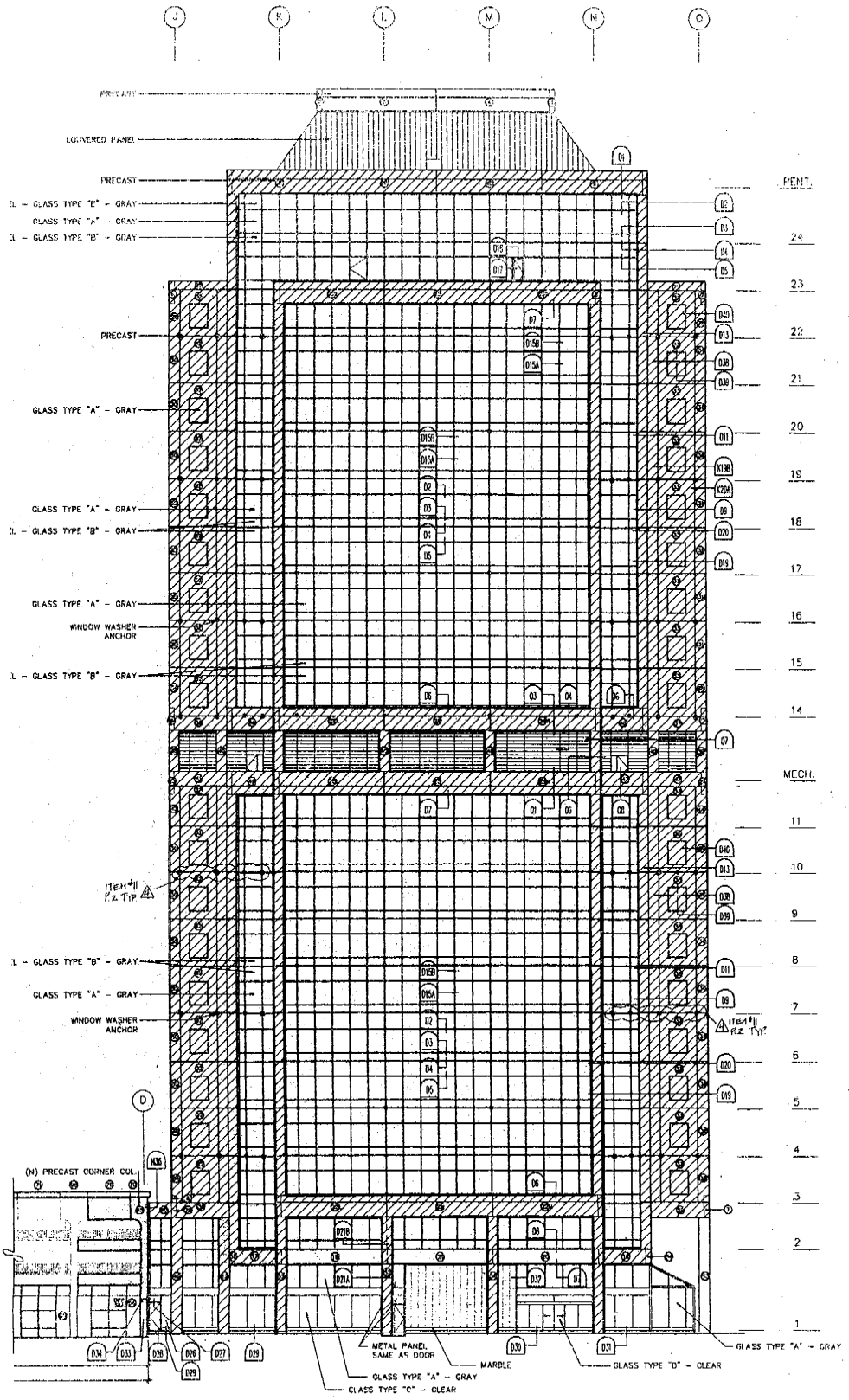

LEGEND:

SCOPE OF WORK: PRECAST CONCRETE

SK-5	04128	01/24/05	EAST ELEVATION SCALE: 1/32"=1'-0"	450 N STREET SACRAMENTO, CA EXTERIOR ENVELOPE REMEDIATION	McGinnis Chen Associates Inc. ARCHITECT. ENGINEERS

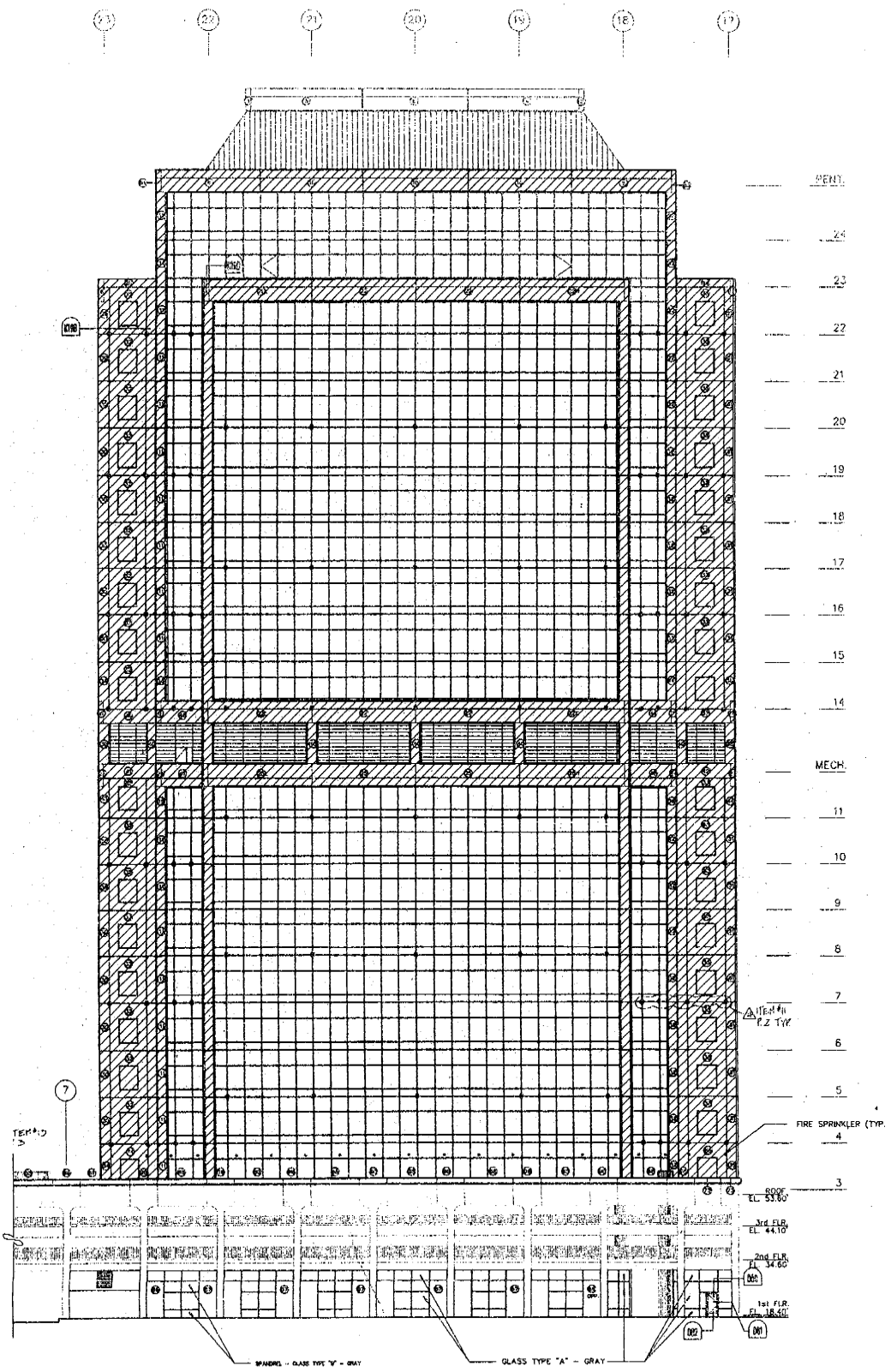

LEGEND:

SCOPE OF WORK: PRECAST CONCRETE

SK-6	04128	01/24/05	SOUTH ELEVATION SCALE: 1/32"=1'-0"	450 N STREET SACRAMENTO, CA EXTERIOR ENVELOPE REMEDIATION	McGinnis Chen Associates Inc. ARCHITECTS ENGINEERS

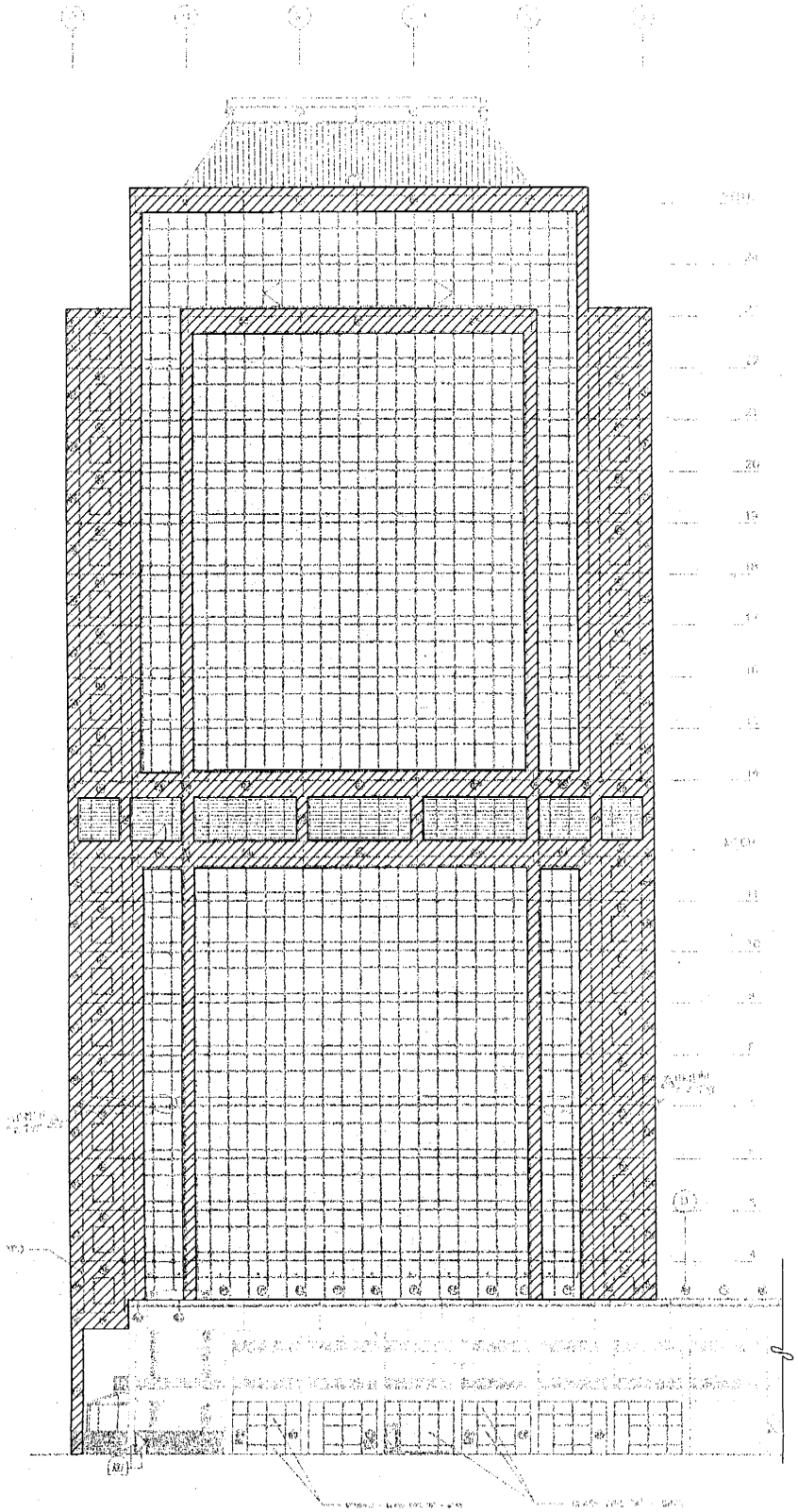

LEGEND:

SCOPE OF WORK: PRECAST CONCRETE

SK-7	04/28 01/24/05	WEST ELEVATION SCALE: 1/32"=1'-0"	450 N STREET SACRAMENTO, CA EXTERIOR ENVELOPE REMEDIATION

McGinnis Chen Associates Inc.
ARCHITECT - ENGINEERS

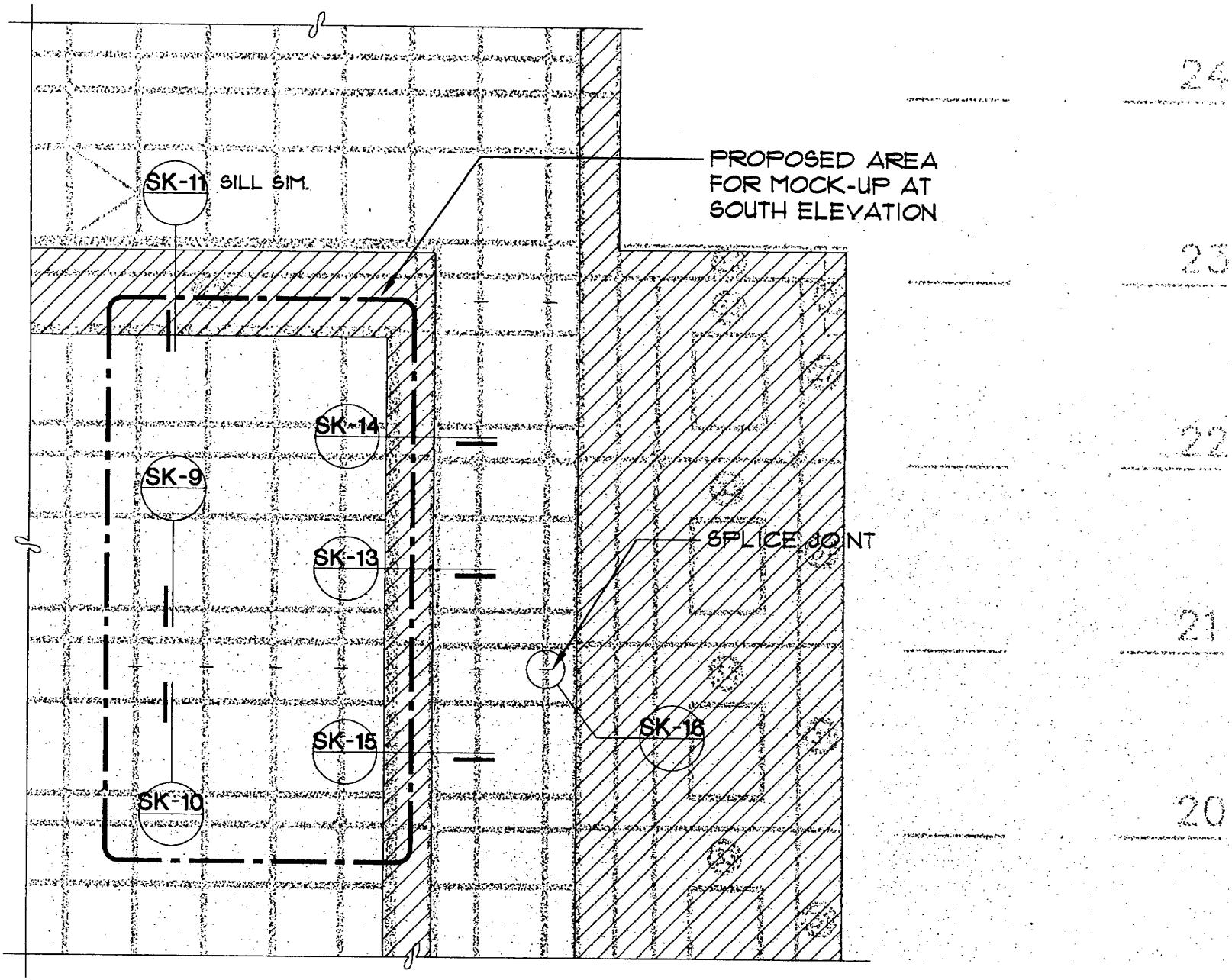

CK_8

04128

01/24/05

PARTIAL ELEVATION
MOCK-UP AREA (AT SOUTH ELEVATION)
SCALE: 3/32"=1'-0"

450 N STREET
SACRAMENTO, CA
EXTERIOR ENVELOPE REMEDIATION

McGinnis Chen Associates Inc.
ARCHITECTS & ENGINEERS

Photo #106

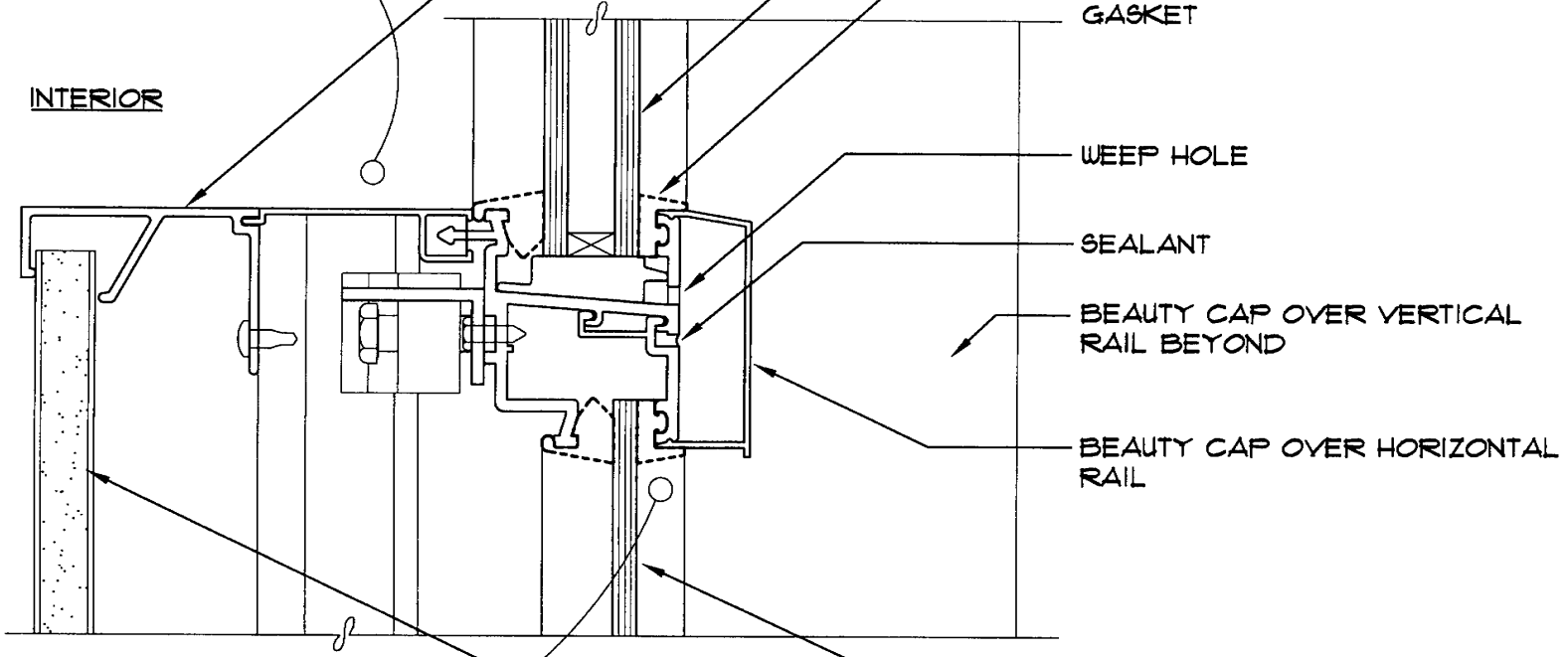

Photo #091

SK-9E | 04128 | 01/24/05

CURTAINWALL - EXISTING
TYPICAL HORIZONTAL RAIL
SCALE: 6"=1'-0"

450 N STREET
SACRAMENTO, CA
EXTERIOR ENVELOPE REMEDIATION

McGinnis Chen Associates Inc.
ARCHITECTS ENGINEERS
10 NOTTINGHAM PLACE, SAN FRANCISCO, CALIFORNIA 94133 PHONE: 415.986.3673 FAX: 415.398.0588

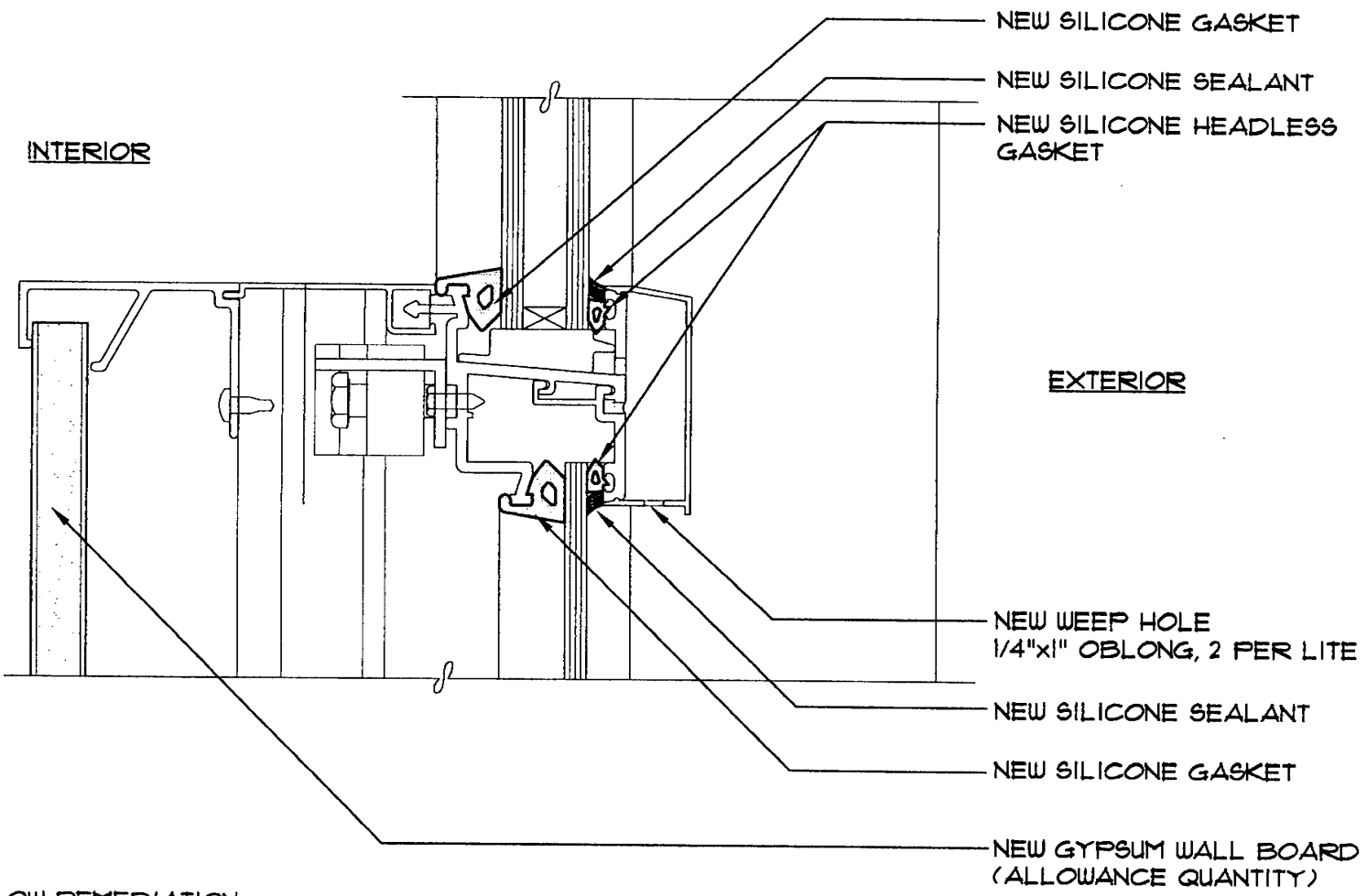

NOTE: FOLLOW REMEDIATION PROCEDURES OUTLINED IN SCOPE OF WORK

SK-9R	04128	01/24/05	CURTAINWALL - REMEDIATION TYPICAL HORIZONTAL RAIL SCALE: 6"=1'-0"

450 N STREET
SACRAMENTO, CA
EXTERIOR ENVELOPE REMEDIATION

McGinnis Chen Associates Inc.
ARCHITECTS ENGINEERS

Photo #124

INTERIOR

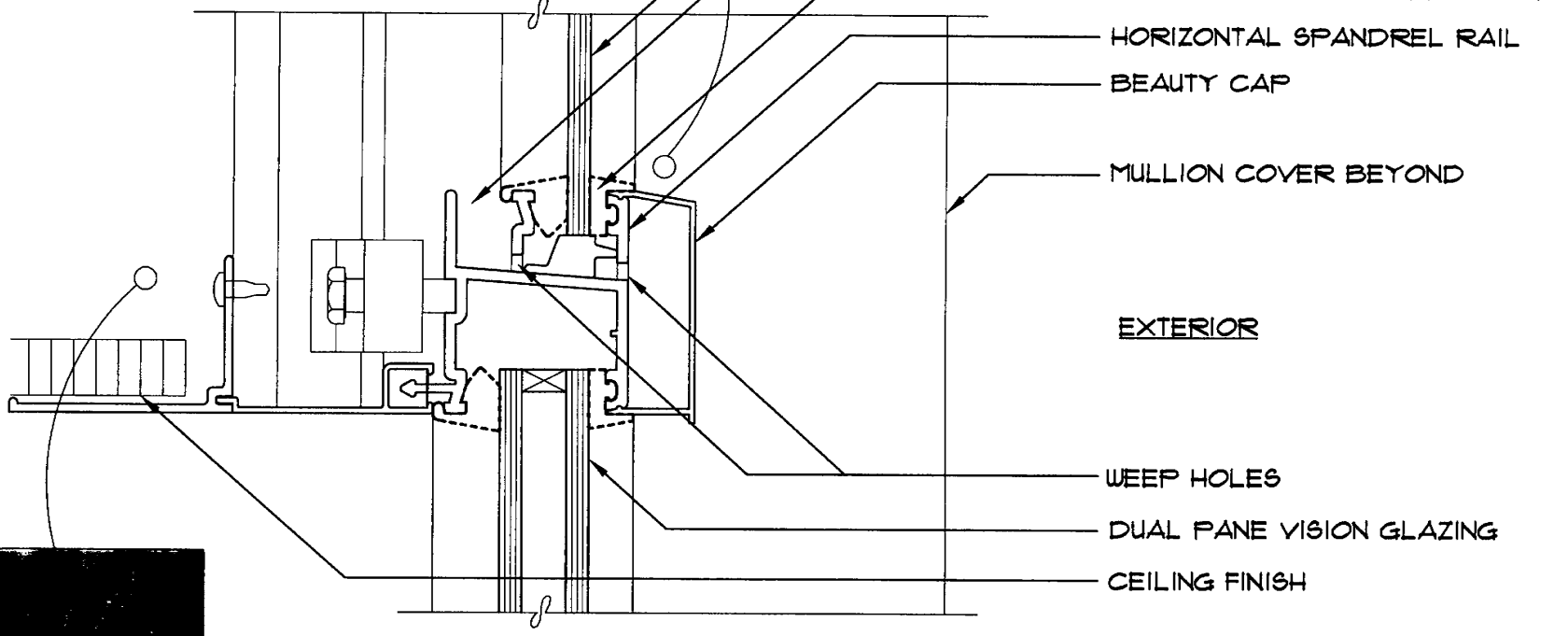

Photo #030

SK-10E | 04128 | 01/24/05

CURTAINWALL - EXISTING
SPANDREL PANEL RAIL
SCALE: 6"=1'-0"

450 N STREET
SACRAMENTO, CA
EXTERIOR ENVELOPE REMEDIATION

McGinnis Chen Associates Inc.
ARCHITECTS ENGINEERS
15 NOTTINGHAM PLACE, SAN FRANCISCO, CALIFORNIA 94133 PHONE: 415.398.2873 FAX: 415.398.2886

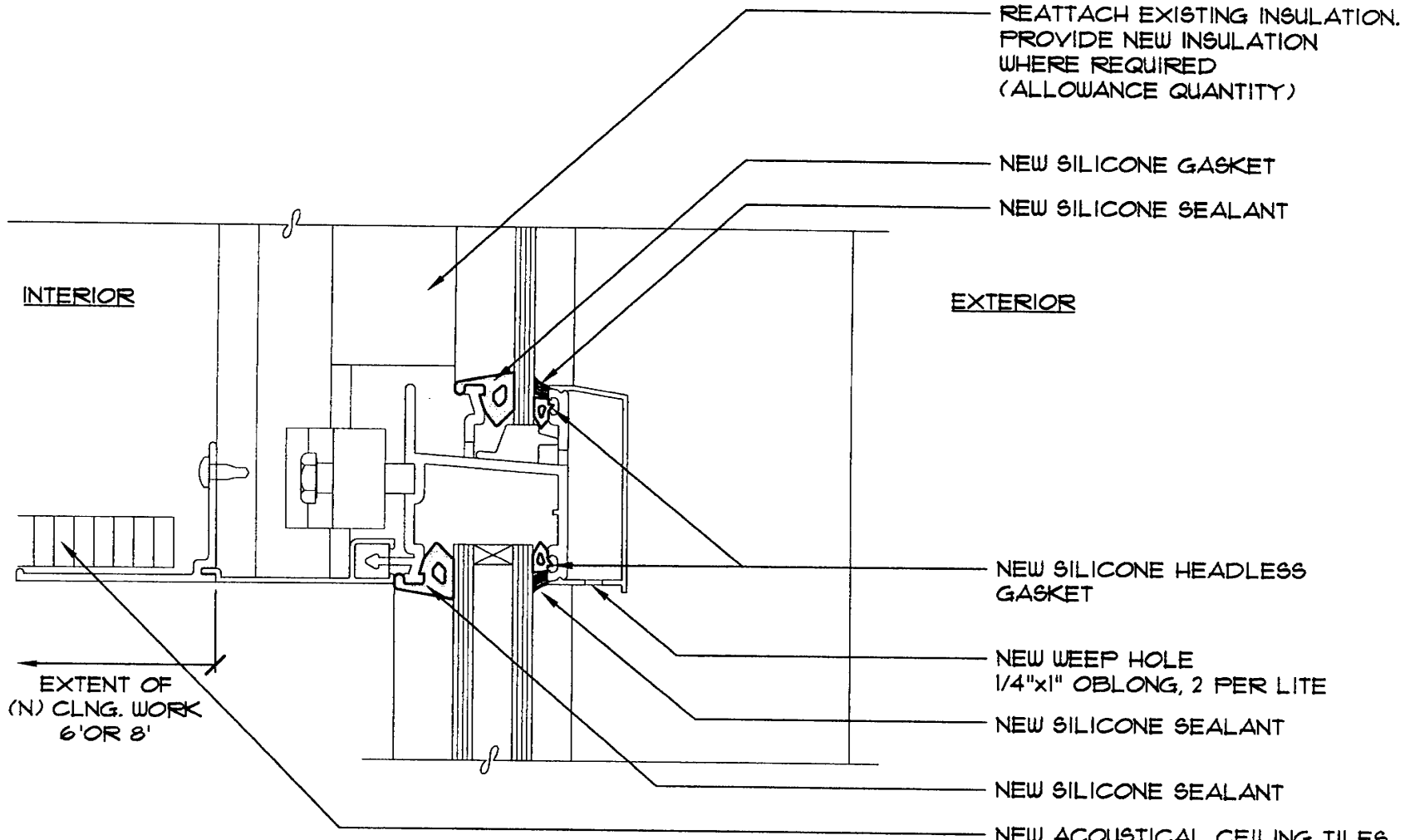

NOTE: FOLLOW REMEDIATION PROCEDURES OUTLINED IN SCOPE OF WORK

SK-10R | 04128 | 01/24/05

CURTAINWALL - REMEDIATION
SPANDREL PANEL RAIL
SCALE: 6"=1'-0"

450 N STREET
SACRAMENTO, CA
EXTERIOR ENVELOPE REMEDIATION

McGinnis Chen Associates Inc.
ARCHITECTS ENGINEERS
10 NOTTINGHAM PLACE, SAN FRANCISCO, CALIFORNIA 94133 PHONE 415 989 3673 FAX 415 [illegible]

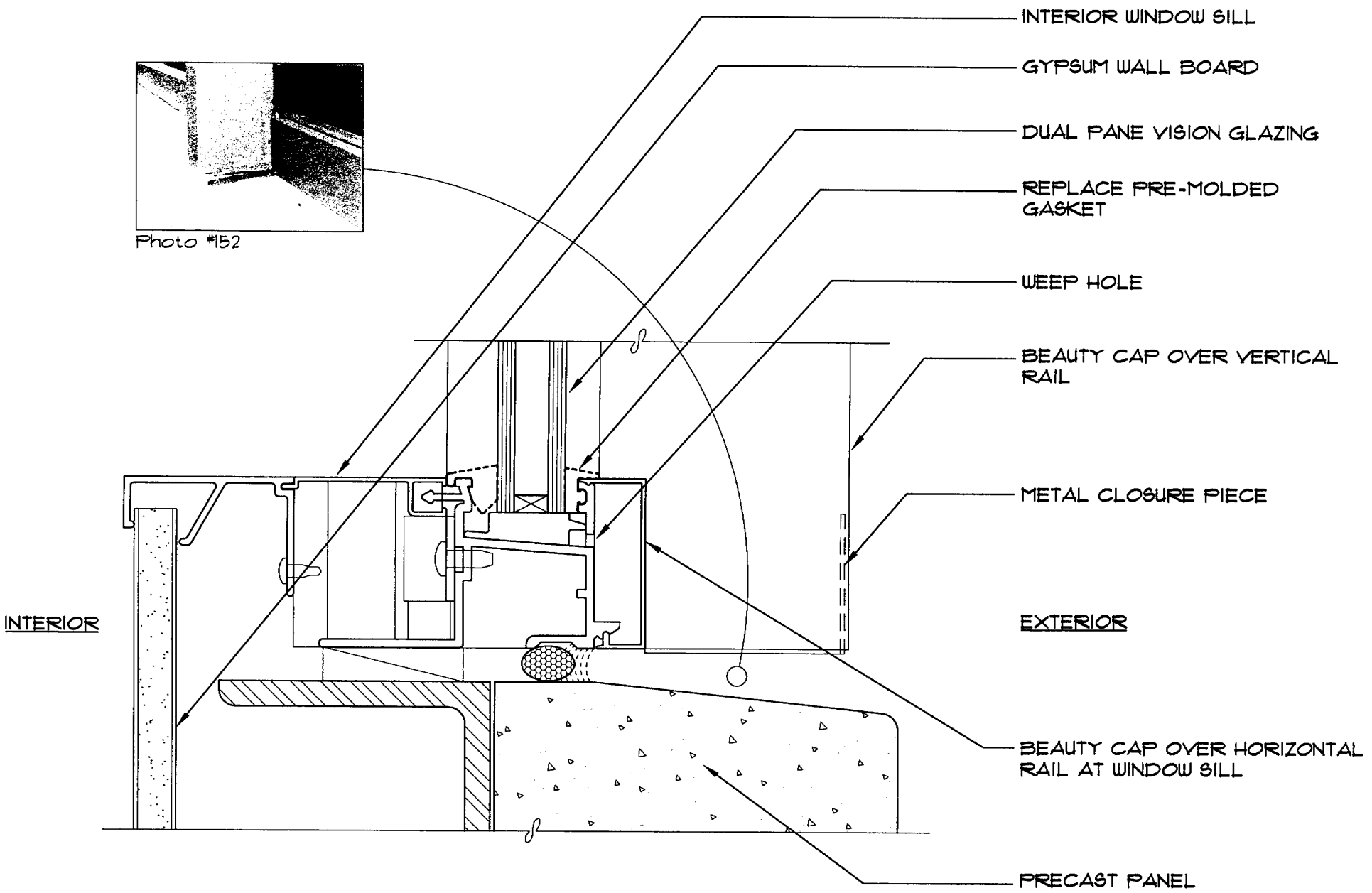

Photo #152

SK-11E	04128	01/24/05	CURTAINWALL - EXISTING SILL TO PRECAST PANEL SCALE: 6"=1'-0"	450 N STREET SACRAMENTO, CA EXTERIOR ENVELOPE REMEDIATION

McGinnis Chen Associates Inc.
ARCHITECTS ENGINEERS

NOTE: FOLLOW REMEDIATION PROCEDURES OUTLINED IN SCOPE OF WORK

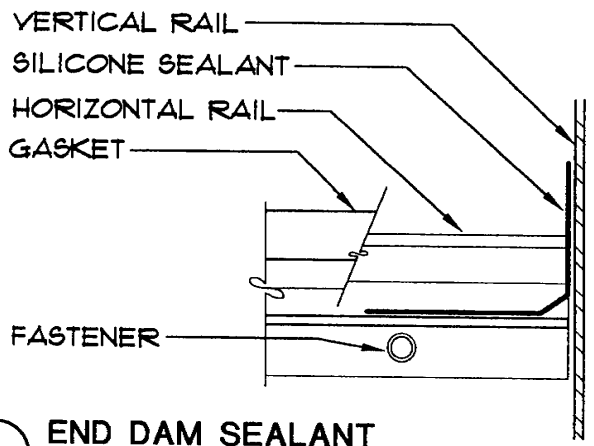

A END DAM SEALANT ALTERNATE

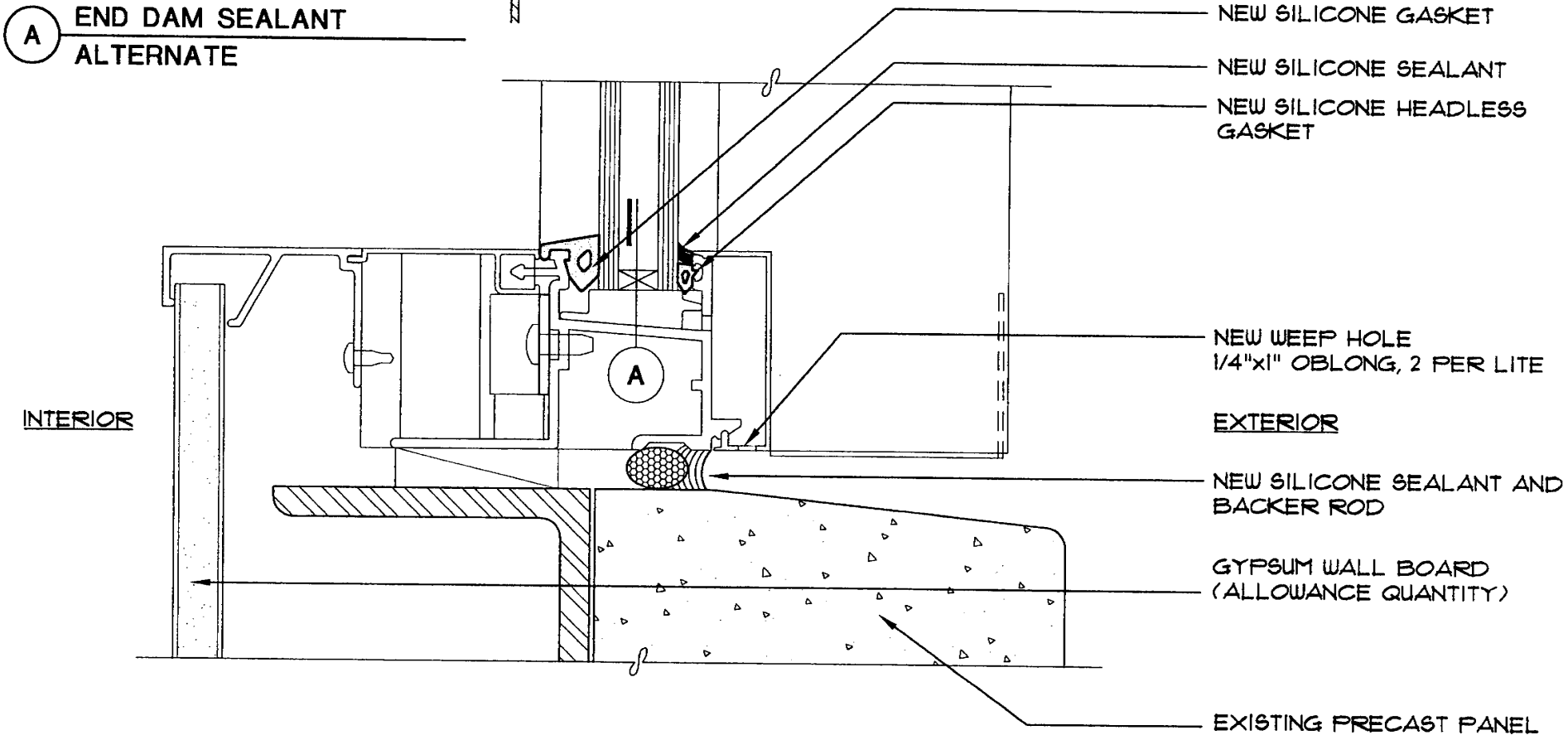

SK-11R	04128	01/24/05	CURTAINWALL - REMEDIATION SILL TO PRECAST PANEL SCALE: 6"=1'-0"	450 N STREET SACRAMENTO, CA EXTERIOR ENVELOPE REMEDIATION	McGinnis Chen Associates Inc. ARCHITECTS ENGINEERS

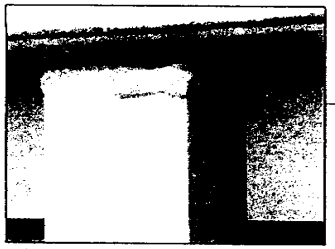

Photo #155

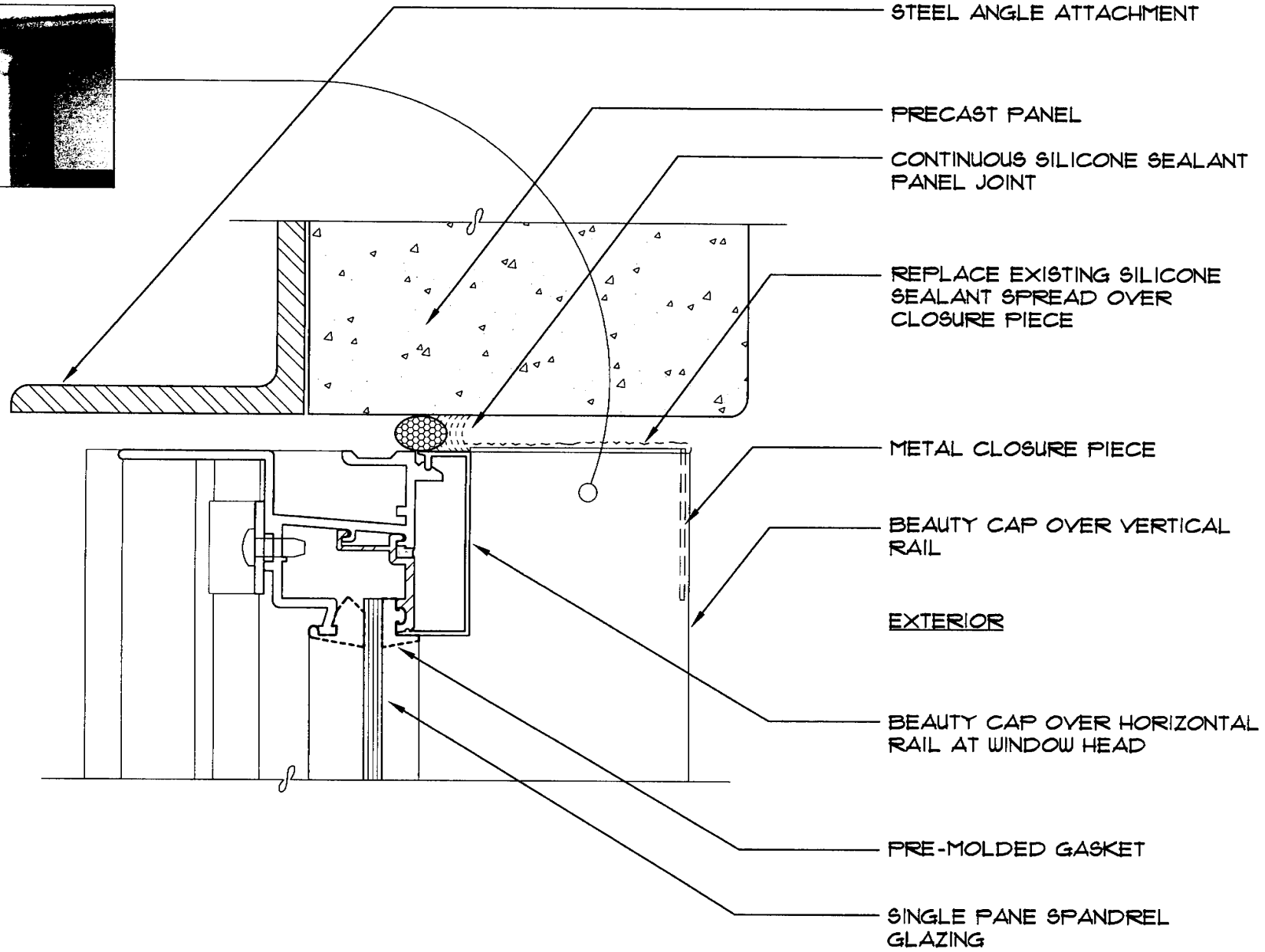

SK-12E | 07128 | 01/24/05

CURTAINWALL - EXISTING
HEAD TO PRECAST PANEL
SCALE: 6"=1'-0"

450 N STREET
SACRAMENTO, CA
EXTERIOR ENVELOPE REMEDIATION

McGinnis Chen Associates Inc.
ARCHITECTS ENGINEERS
10 NOTTINGHAM PLACE, SAN FRANCISCO, CALIFORNIA 94133 PHONE: 415.986.3073 FAX: 415.398.5986

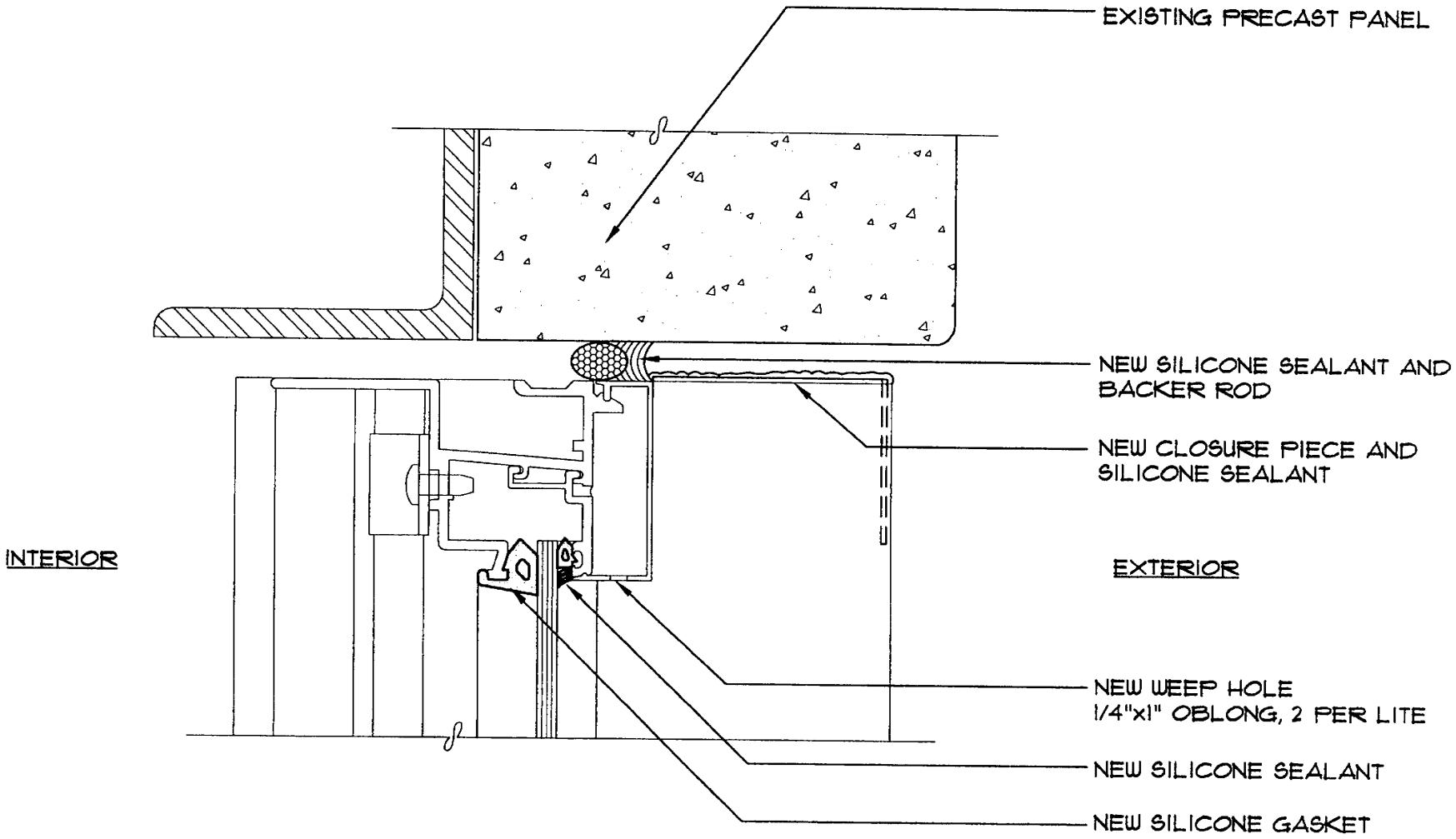

NOTE: FOLLOW REMEDIATION PROCEDURES OUTLINED IN SCOPE OF WORK

SK-12R | 04128 | 01/24/05

CURTAINWALL - REMEDIATION
HEAD TO PRECAST PANEL
SCALE: 6"=1'-0"

450 N STREET
SACRAMENTO, CA
EXTERIOR ENVELOPE REMEDIATION

McGinnis Chen Associates Inc.
ARCHITECTS ENGINEERS

Photo #018

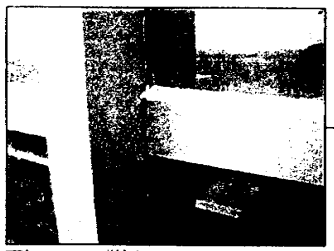

Photo #118

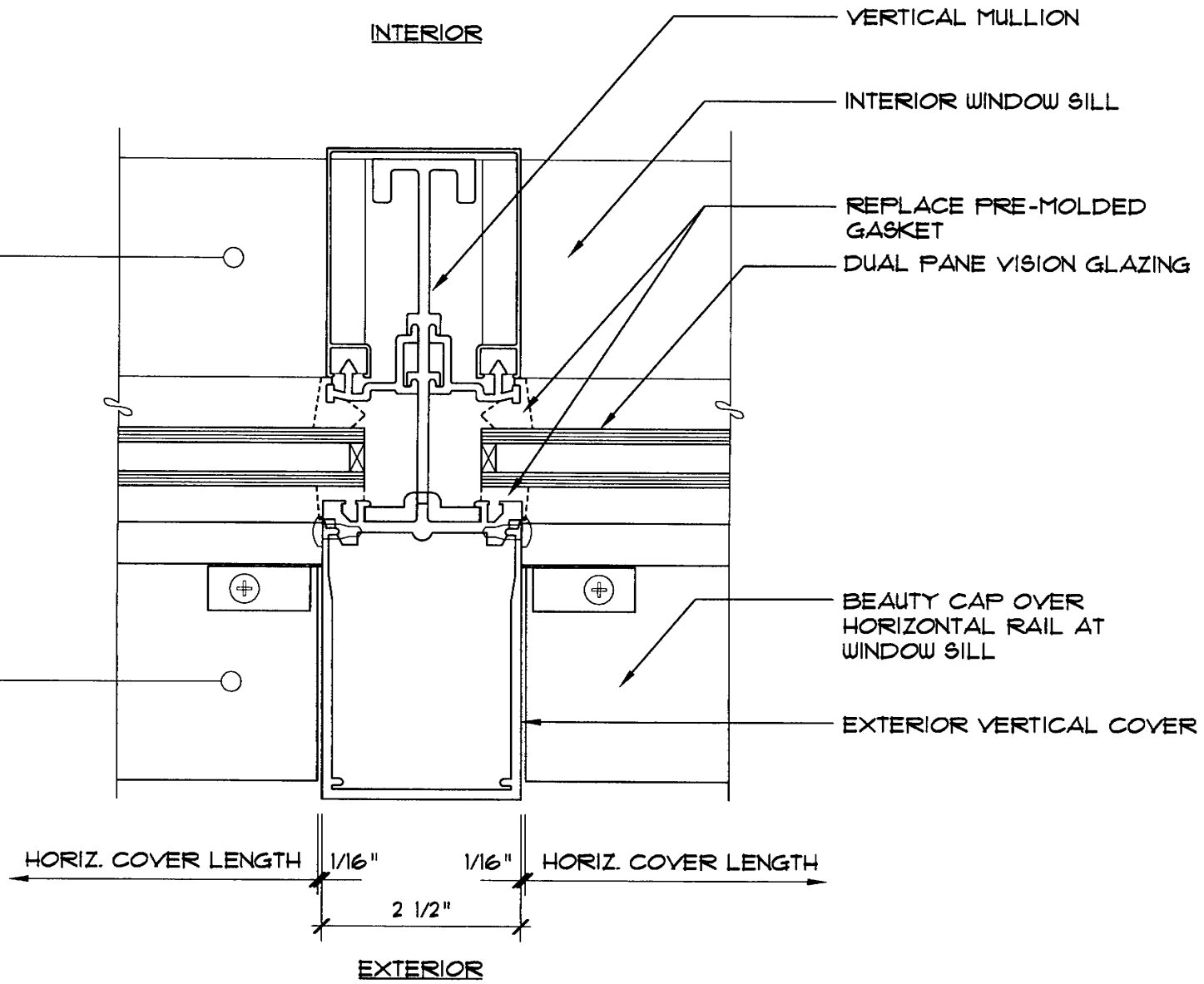

SK-13E

04128

01/24/05

CURTAINWALL - EXISTING
TYPICAL VERTICAL
SCALE: 6"=1'-0"

450 N STREET
SACRAMENTO, CA
EXTERIOR ENVELOPE REMEDIATION

McGinnis Chen Associates Inc.
ARCHITECTS ENGINEERS
10 NOTTINGHAM PLACE, SAN FRANCISCO, CALIFORNIA 94133 PHONE: 415.989.3972 FAX: 415.288.0288

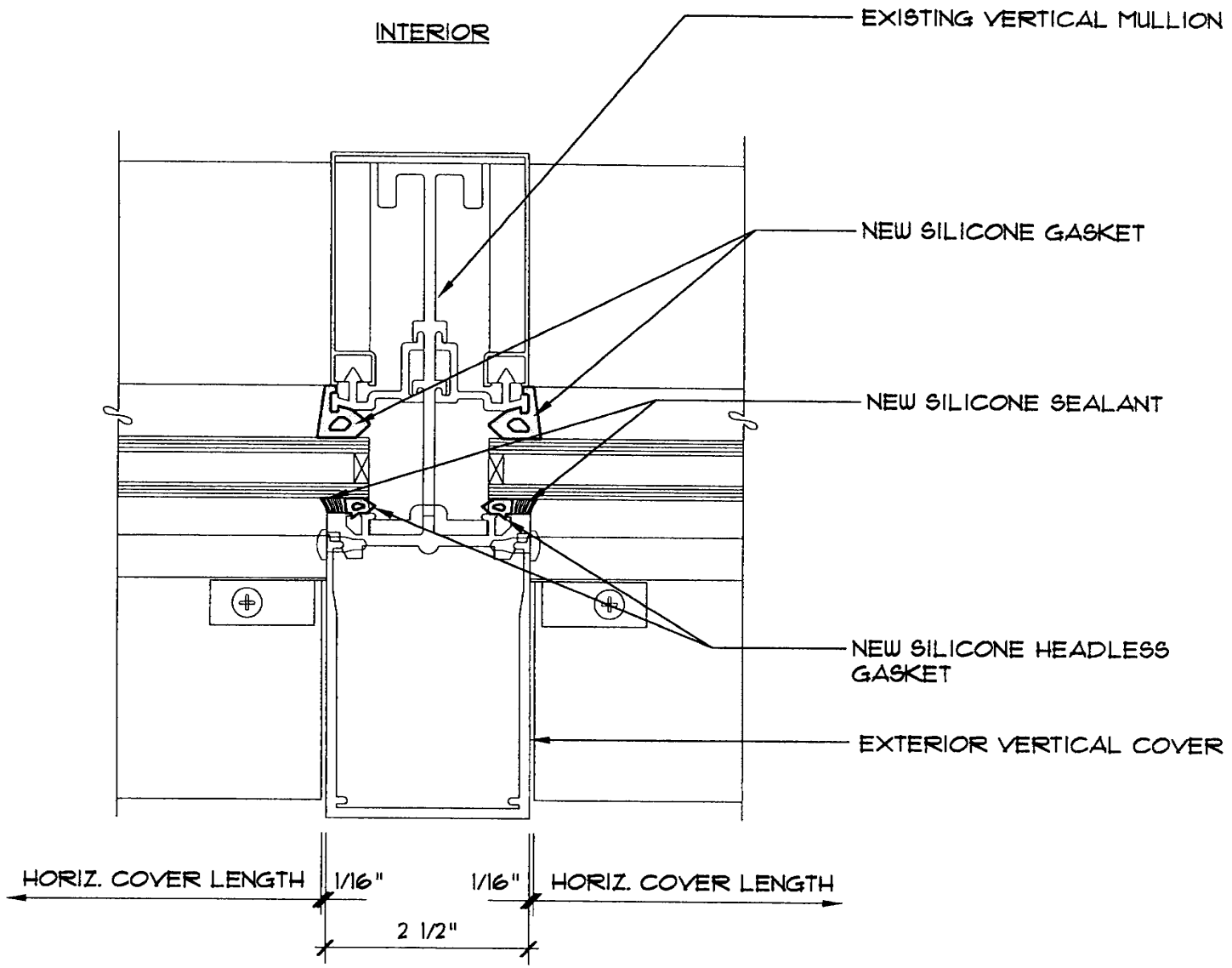

NOTE: FOLLOW REMEDIATION PROCEDURES OUTLINED IN SCOPE OF WORK

SK-13R | 04128 | 01/24/05

CURTAINWALL - REMEDIATION
TYPICAL VERTICAL
SCALE: 6"=1'-0"

450 N STREET
SACRAMENTO, CA
EXTERIOR ENVELOPE REMEDIATION

McGinnis Chen Associates Inc.
ARCHITECTS ENGINEERS

Photo #040

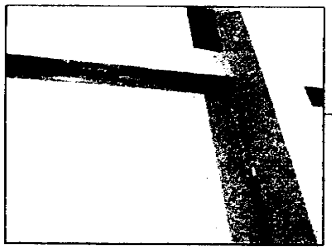

Photo #120

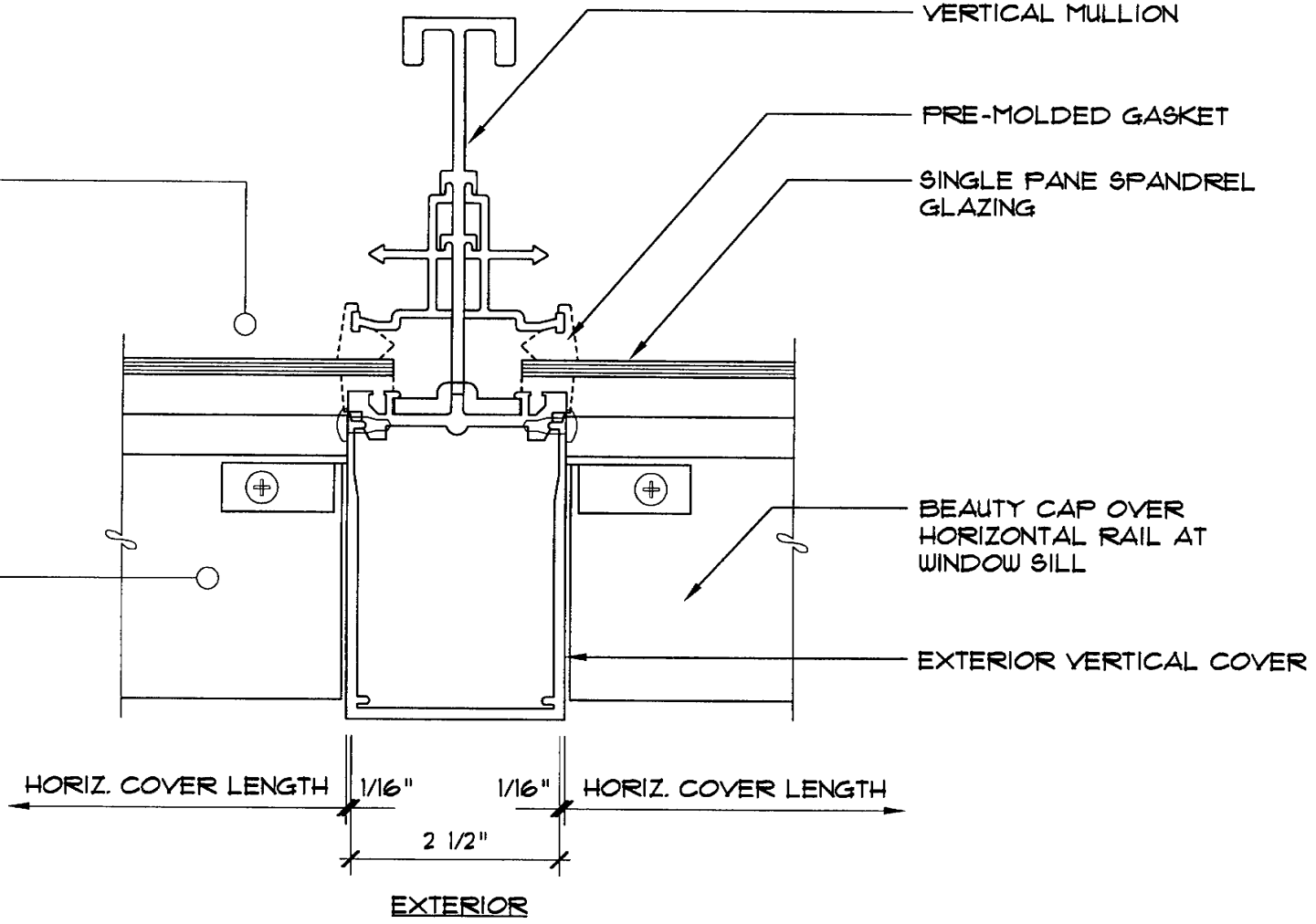

SK-17E

04128

01/24/05

CURTAINWALL - EXISTING
VERTICAL AT SPANDREL
SCALE: 6"=1'-0"

450 N STREET
SACRAMENTO, CA
EXTERIOR ENVELOPE REMEDIATION

McGinnis Chen Associates Inc.
ARCHITECTS ENGINEERS
10 NOTTINGHAM PLACE, SAN FRANCISCO, CALIFORNIA 94133 PHONE: 415.986.3673 FAX: 415.986.0986

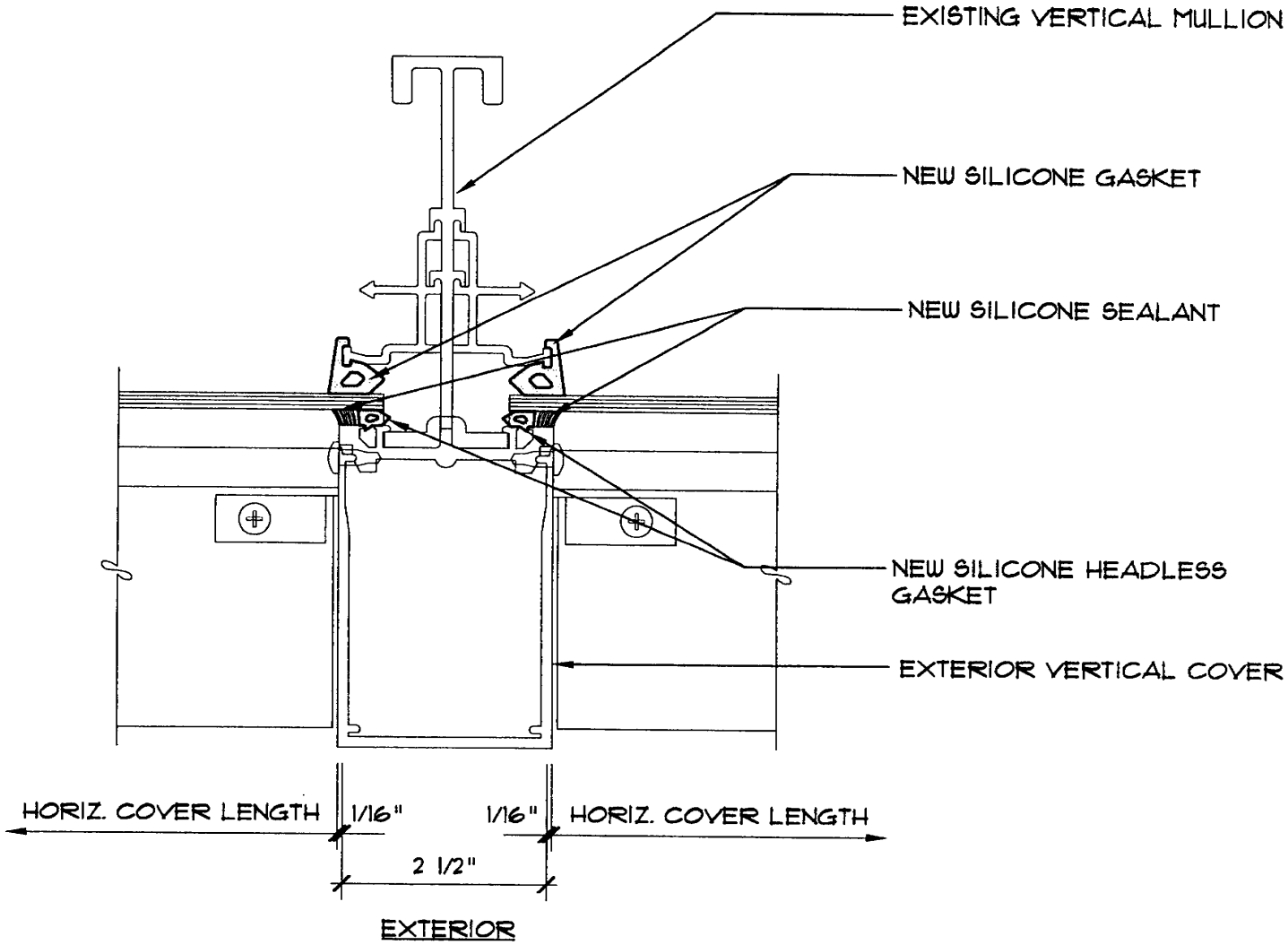

NOTE: FOLLOW REMEDIATION PROCEDURES OUTLINED IN SCOPE OF WORK.

SK-17.R	04128	01/24/05	CURTAINWALL - REMEDIATION VERTICAL AT SPANDREL SCALE: 6"=1'-0"	450 N STREET SACRAMENTO, CA EXTERIOR ENVELOPE REMEDIATION	McGinnis Chen Associates Inc. ARCHITECTS ENGINEERS

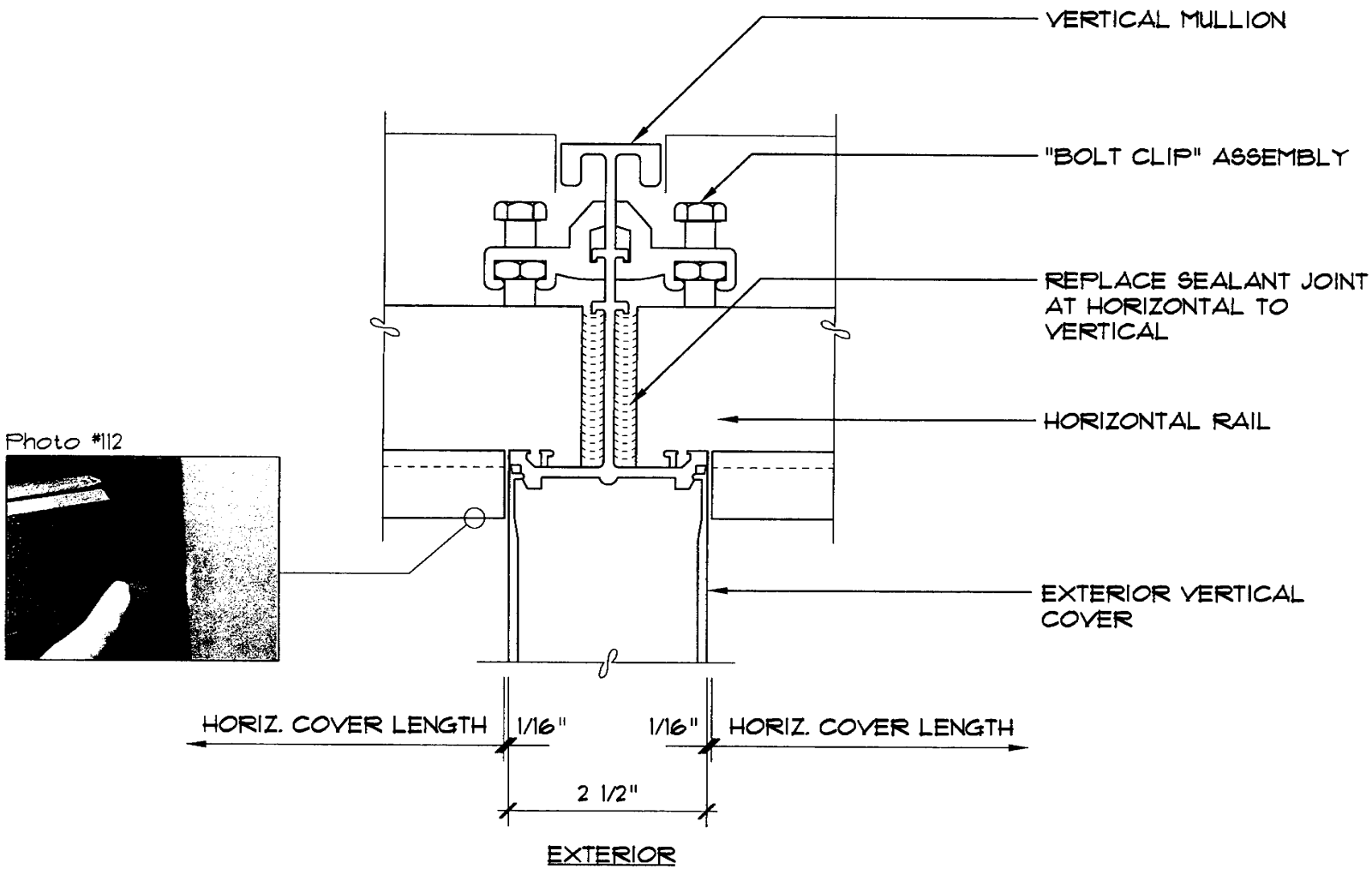

SK-15E	04128	01/24/05	CURTAINWALL - EXISTING TYPICAL RAIL TO MULLION SCALE: 6"=1'-0"

450 N STREET
SACRAMENTO, CA
EXTERIOR ENVELOPE REMEDIATION

McGinnis Chen Associates Inc.
ARCHITECTS ENGINEERS

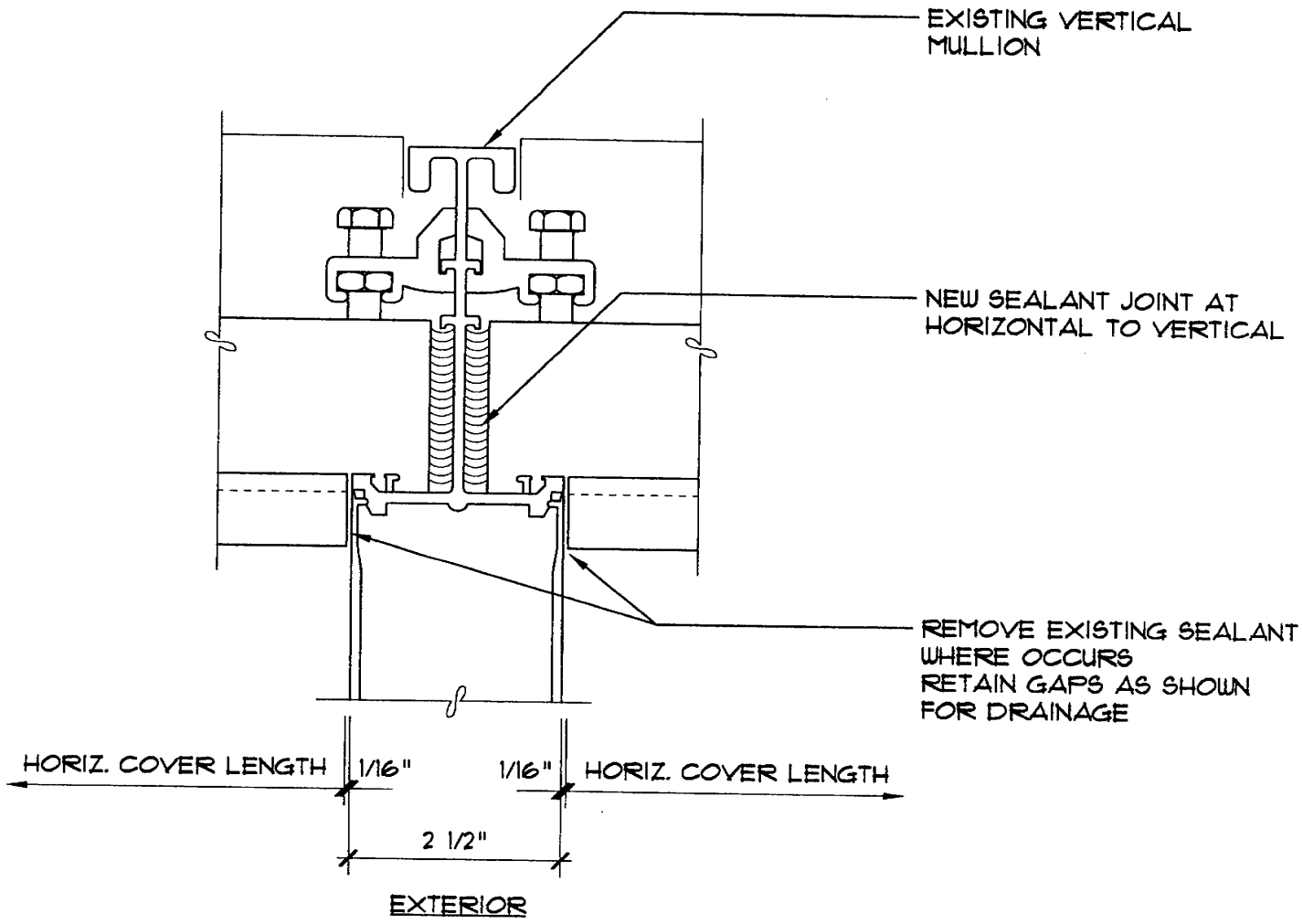

NOTE: FOLLOW REMEDIATION PROCEDURES OUTLINED IN SCOPE OF WORK

SK-15R	04128	01/24/05	CURTAINWALL - REMEDIATION TYPICAL RAIL TO MULLION SCALE: 6"=1'-0"	450 N STREET SACRAMENTO, CA EXTERIOR ENVELOPE REMEDIATION

McGinnis Chen Associates Inc.
ARCHITECTS ENGINEERS

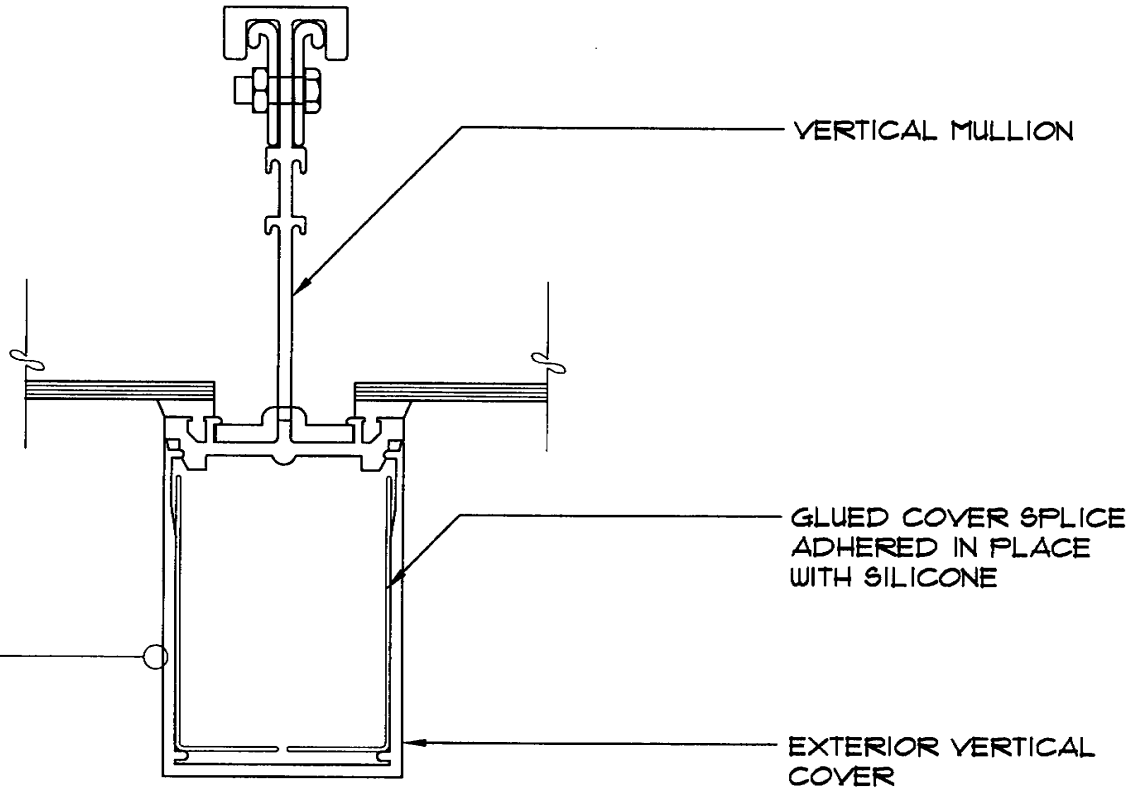

Photo #128

SK-16E	04128	01/24/05	CURTAINWALL - EXISTING TYPICAL VERTICAL SPLICE JOINT SCALE: 6"=1'-0"	450 N STREET SACRAMENTO, CA EXTERIOR ENVELOPE REMEDIATION	McGinnis Chen Associates Inc. ARCHITECTS ENGINEERS

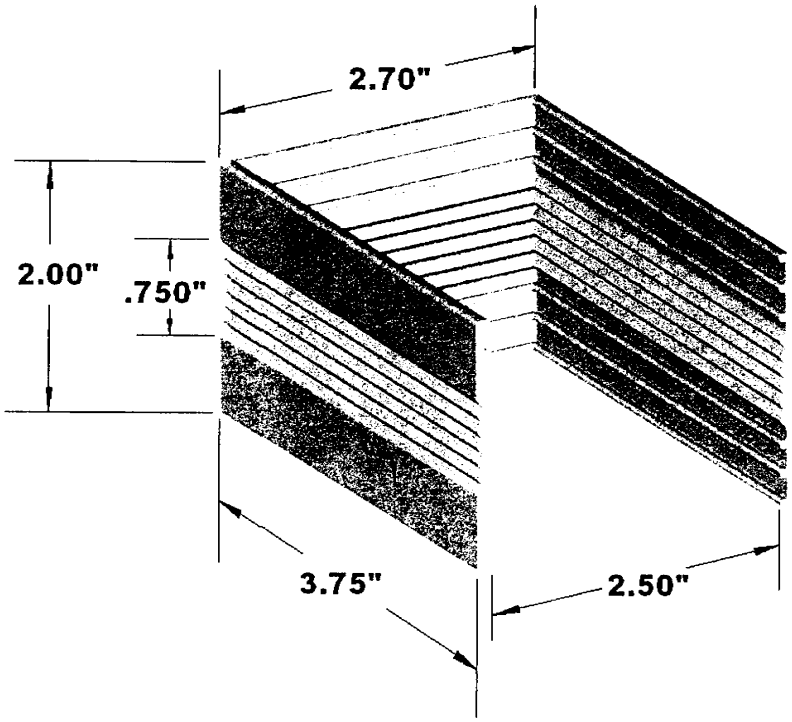

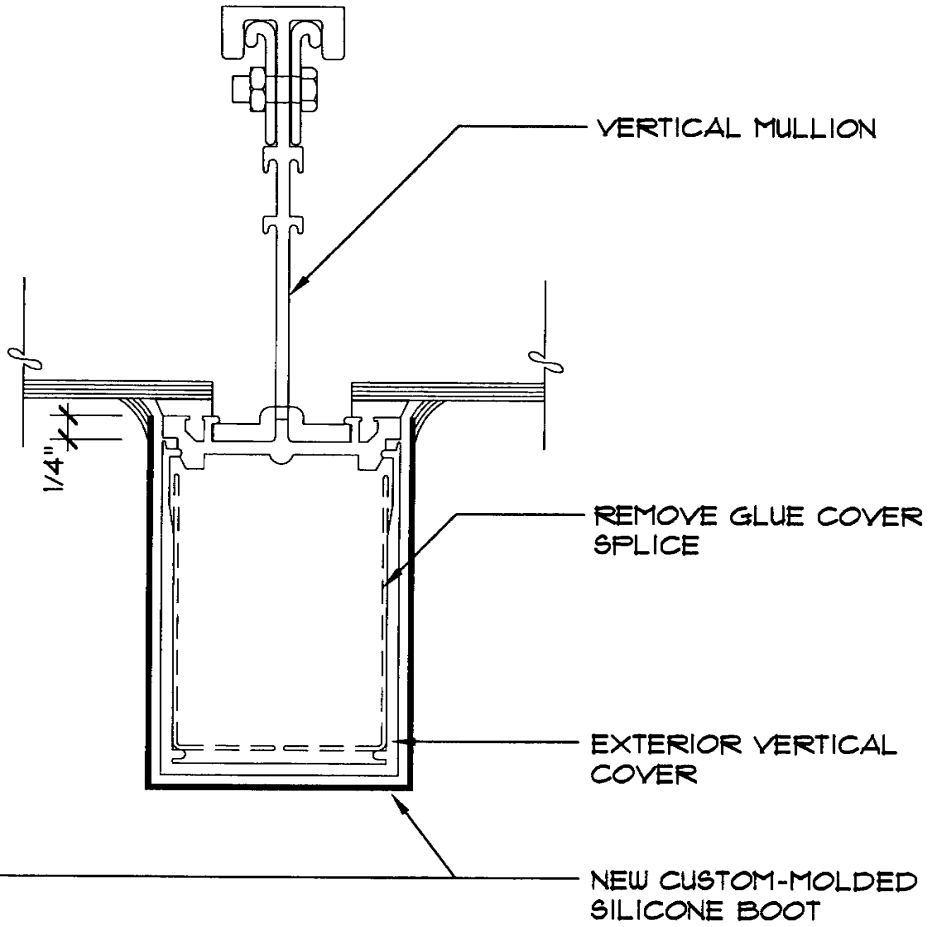

NOTE: FOLLOW REMEDIATION PROCEDURES OUTLINED IN SCOPE OF WORK.

SK-16R | 04128 | 01/24/05

CURTAINWALL - REMEDIATION
TYPICAL VERTICAL SPLICE JOINT
SCALE: 6"=1'-0"

450 N STREET
SACRAMENTO, CA
EXTERIOR ENVELOPE REMEDIATION

McGinnis Chen Associates Inc.
ARCHITECTS ENGINEERS
10 NOTTINGHAM PLACE, SAN FRANCISCO, CALIFORNIA 94133 PHONE: 415.986.8873 FAX: 415.986.0889